7168 Group

Make a statement with this chic and curvy collection! It features sloping track arms that wrap into a beautiful curve around the back, catching your eye from every angle. French seamed all over to give a clean and modern aesthetic, these pieces have loose box border back pillows and plush Blend Down seat cushioning.
Quality handcrafted in America.

Individual Pieces

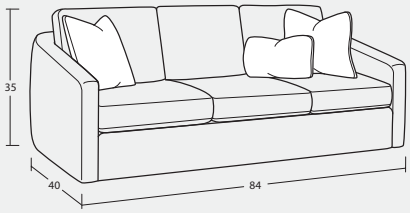

#50BD SOFA
84W x 40D x 35H
2- 20" A Pillow
1- Kidney Pillow

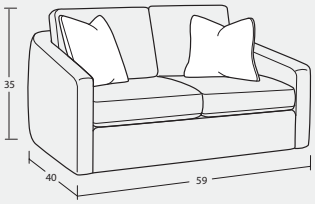

#30BD LOVESEAT
59W x 40D x 35H
2- 20" A Pillow

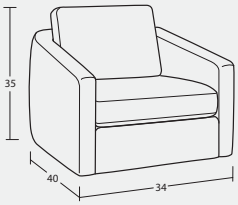

#10BD CHAIR
34W x 40D x 35H

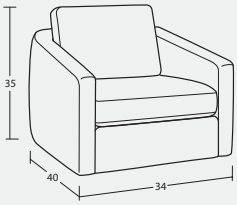

#10BDSC SWIVEL CHAIR
34W x 40D x 35H

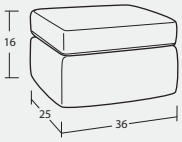

#00BD OTTOMAN
36W x 25D x 16H

Sectional Pieces

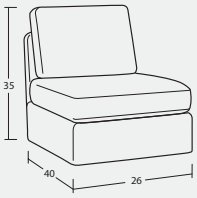

#13BD ARMLESS CHAIR
26W x 40D x 35H

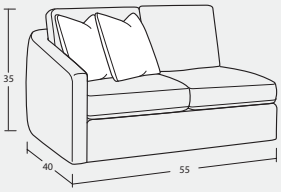

#32BD LAF LOVESEAT
55W x 40D x 35H
1- 20" A Pillow
1- 20" B Pillow

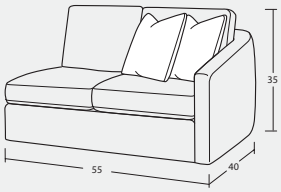

#31BD RAF LOVESEAT
55W x 40D x 35H
1- 20" A Pillow
1- 20" B Pillow

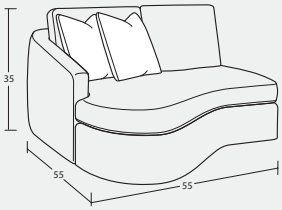

#22BD LAF CUDDLER
55W x 55D x 35H
1- 20" A Pillow
1- 20" B Pillow

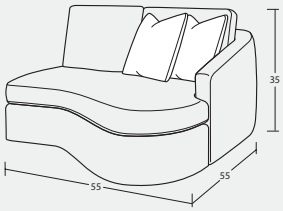

#21BD RAF CUDDLER
55W x 55D x 35H
1- 20" A Pillow
1- 20" B Pillow

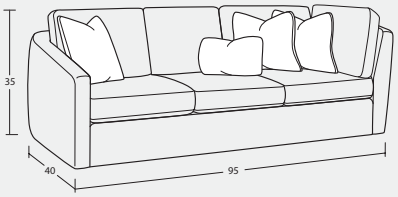

#56BD LAF SOFA w/ RETURN
95W x 40D x 35H
2- 20" A Pillow
1- 20" B Pillow
1- Kidney Pillow

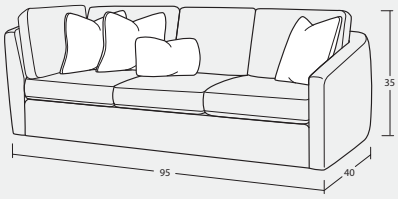

#55BD RAF SOFA w/ RETURN
95W x 40D x 35H
2- 20" A Pillow
1- 20" B Pillow
1- Kidney Pillow

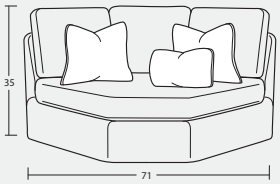

#14BD PIE WEDGE
71W x 49D x 35H
2- 20" A Pillow
1- Kidney Pillow

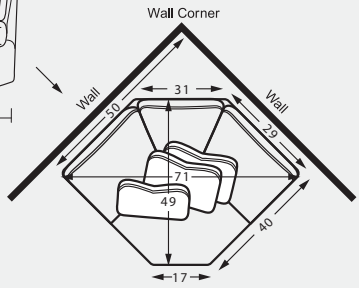

4.18.23

SAMPLE CONFIGURATIONS

Create the perfect sectional for your living space!

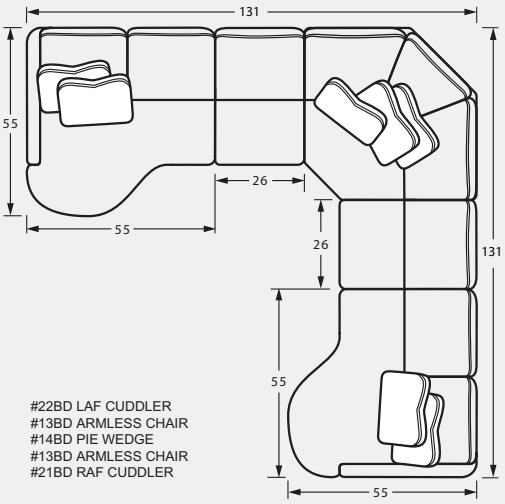

#22BD LAF CUDDLER
#13BD ARMLESS CHAIR
#14BD PIE WEDGE
#13BD ARMLESS CHAIR
#21BD RAF CUDDLER

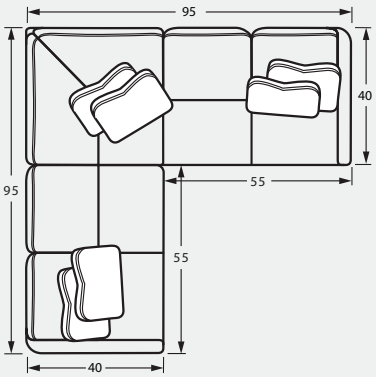

#55BD RAF SOFA w/ RETURN
#32BD LAF LOVESEAT

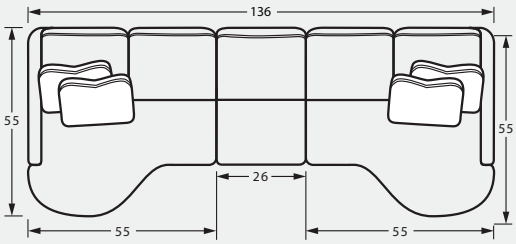

#22BD LAF CUDDLER
#13BD ARMLESS CHAIR
#21BD RAF CUDDLER

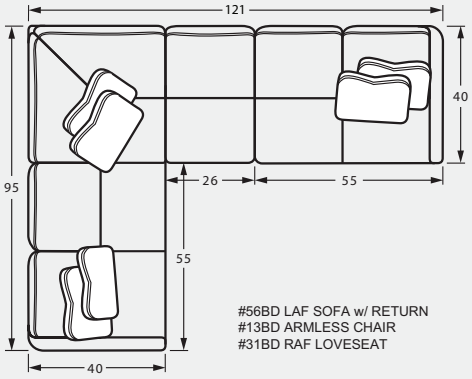

#56BD LAF SOFA w/ RETURN
#13BD ARMLESS CHAIR
#31BD RAF LOVESEAT

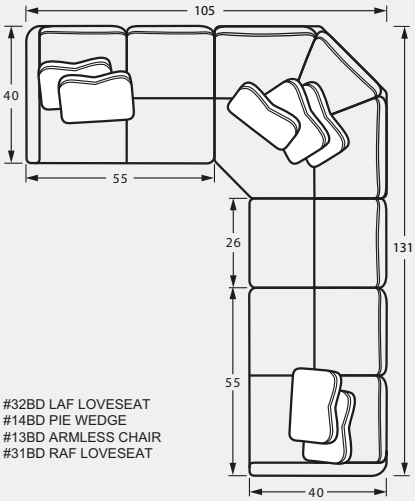

#32BD LAF LOVESEAT
#14BD PIE WEDGE
#13BD ARMLESS CHAIR
#31BD RAF LOVESEAT

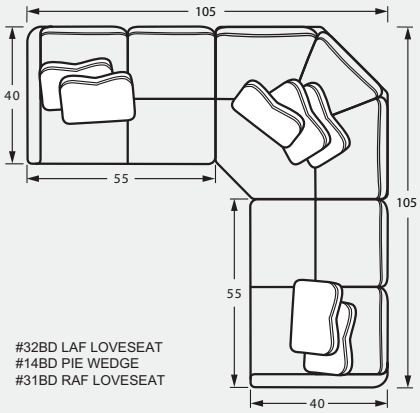

#32BD LAF LOVESEAT
#14BD PIE WEDGE
#31BD RAF LOVESEAT

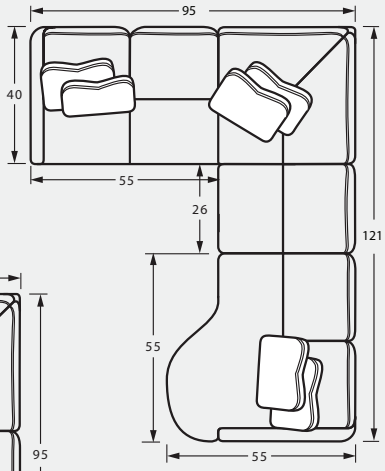

#56BD LAF SOFA w/ RETURN
#13BD ARMLESS CHAIR
#21BD RAF CUDDLER

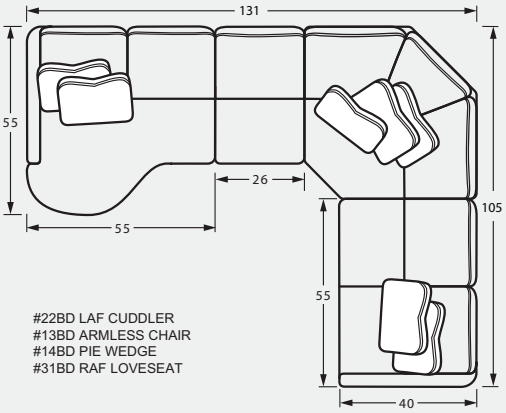

#22BD LAF CUDDLER
#13BD ARMLESS CHAIR
#14BD PIE WEDGE
#31BD RAF LOVESEAT

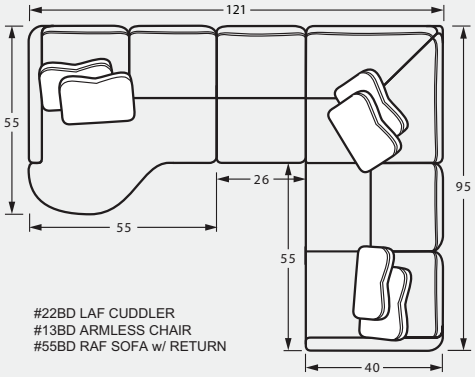

#22BD LAF CUDDLER
#13BD ARMLESS CHAIR
#55BD RAF SOFA w/ RETURN

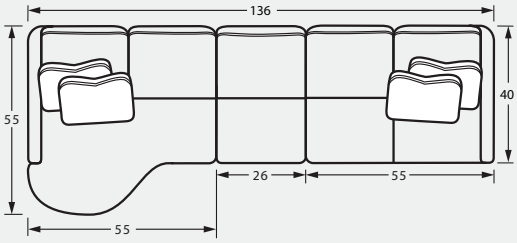

#22BD LAF CUDDLER
#13BD ARMLESS CHAIR
#31BD RAF LOVESEAT

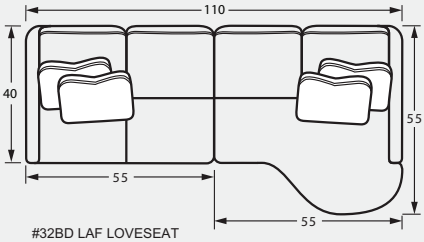

#32BD LAF LOVESEAT
#21BD RAF CUDDLER

4.18.23